Translated from German to English - www.onlinedoctranslator.com

HKW-Elektronik GmbH

# EM6 DCF 3V
## Receiver module DCF 77.5 kHz

The EM6 DCF receiver module, together with a ferrite rod antenna (77.5 kHz), forms a complete reception and demodulation unit for the German time signal transmitter DCF77. The module is designed for a 3 V operating voltage. The demodulated time signal is provided at the module's signal output (LP6) at the level of the original time signal (LOW active) for further processing (decoding). The flexible technical platform of this EM6 module allows the implementation of additional module configurations upon request (1.5 V operating voltage or HIGH active output signal).

**Dimensions**[mm]:

* Tolerances = - 0.2 mm
Pad dimensions: 2.6 mm x 2 mm; bore = 1 mm

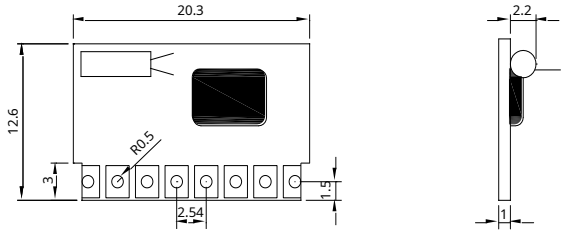


**Pin assignment:**

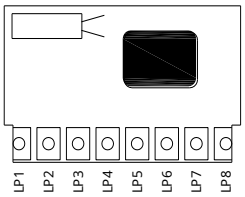


| | |
|---|---|
| LP1 | - GND |
| LP2 | - UB |
| LP3 | - ANT2 |
| LP4 | - ANT1 |
| LP5 | - PON |
| LP6 | - DCF |
| LP7 | - NC |
| LP8 | - TEST |

**Technical data** (Unless otherwise defined, the information applies to: $U_B$=3V; $T_{amb}$=25°C )

| parameter | Condition | symbol | min. | typical | max. | Unit |
|---|---|---|---|---|---|---|
| Receive carrier frequency | | f | | 77.5 | | kHz |
| Operating voltage range | $T_{amb}$= -10...60°C | $U_B$ | 2.2 | 3.0 | 3.6 | V |
| Power consumption; receiver = OFF | $U_{PON}$=open; standby | I | | | 2 | µA |
| Power consumption; receiver = ON | $U_{PON}$=0V; no load! | I | | 0.1 | 0.15 | mA |
| Switching voltage (pin PON) 2) | LOW active | $U_{PON}$ | | | | V |
| Receiver = OFF; standby mode | | | 0.7* $U_{PON\ max.}$ | | $U_{PON\ max.}$ | V |
| Receiver = ON ; PON active | | | 0 | | 0.3* $U_{PON\ max.}$ | V |
| $U_{PON\ max.}$ | | $U_{PON\ max.}$ | | | $U_B$ | V |
| Switching current | $U_{PON}$= 0V | $I_{PON}$ | | | 20 | µA |
| Settling time | | $t_{set\ up}$ | | | 3 | s |
| Input sensitivity | | | | | | |
| a) with generator supply | | $V_{IN\ min.}$ | | 0.30 | 0.60 | $µV_{RMS}$ |
| b) with antenna with undisturbed reception | 1); e.g. with FTD02011R | E | | | 25 | µV/m |
| Antenna matching | | $R_{Res.}$ | | 500 | | kΩ |
| Input capacitance (LP3 – LP4) | Tolerance $C_{IN}$: +/- 20% | $C_{IN}$ | | 18 | | pF |
| Output stage (on LP6) | CMOS push-pull | | | | | |
| Output voltage | | $U_A$ | 0 | | $U_B$ | V |
| Output current (driver power) | | $I_{OUT}$ | - 30 | | 30 | µA |
| Output level at 100% 77.5kHz carrier | $U_B$ | $U_{OUT100}$ | $U_B$- 0.3 | $U_B$ | | V |
| Output level at 25% 77.5kHz carrier | $U_B$ | $U_{OUT\ 25}$ | | 0 | 0.3 | V |
| Output pulse width | at standard pulse width<br>$t_{MOD}$= 100ms<br>$t_{MOD}$= 200ms | <br>$T_{WO100}$<br>$T_{WO200}$ | <br>70<br>170 | | <br>130<br>230 | <br>ms<br>ms |
| Operating temperature range | | $T_{amb}$ | - 10 | | 60 | °C |
| Storage temperature range | | T | - 40 | | 80 | °C |

1) Ferrite rod: Length = 60 mm; Diameter = 10 mm L =
Antenna resonant circuit: 897 µH; C = 4.7 nF; Q >100

2) internal pull-up resistor ($R_{PON\ int.}$= approx. 1 MΩ) is switched to GND with a switch

**HKW-Elektronik GmbH**
Industriestraße 12, D-99846 Seebach
TEL + + 49 36 929-82 330
FAX + + 49 36 929-82 339
kontakt@hkw-elektronik.de
www.hkw-elektronik.de

**Standard configuration**

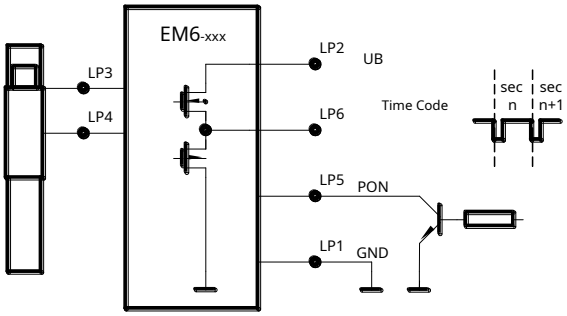


**Application instructions**

1) Connection LP8

This connection can be used in special situations to "freeze" the receiver's internal control. This allows periodically recurring interference (e.g., motor pulses in analog clockworks) to be masked out, reducing their influence on time signal reception. See also the UE6015 data sheet (HLD function).

2) Changing the polarity of the output signal

By utilizing the functionality of the UE6015 receiver circuit, the polarity of the output demodulated TIME CODE signal can be changed if necessary by making a few changes to the module configuration. See the following configuration table with reference to the component layout shown below:

| Module type | R2 | R3 | R4 | Signal to LP6 | Signal to LP7 |
|---|---|---|---|---|---|
| EM6 DCF 3V FBD13020 | 0R | 0R | - | DCF | NC |
| EM6 DCFn 3V FBD130xx | - | - | 0R | NC | / DCF |

A notice:

The assembly plan of an EM6 module based on the UE6015 receiver IC shown here is used solely to identify the pin assignment and various configuration components.

The actually implemented assembly of various module configurations only uses a part of it.

If you require a large quantity, the "EM6 DCFn 3V" module variant can be prepared for production for your application. Please inquire.

3) Module variants for operating voltage range 1.5V

Based on the described technical platform, the EM6 module can also be configured for applications with a 1.5V operating voltage. Depending on the required quantity, the module variants "EM6 DCF 1.5V" or "EM6 DCFn 1.5V" can be prepared for your application. Please inquire.

**Order data**

| | | | |
|---|---|---|---|
| Designation: | EM6 DCF 3V<br>Receiver module DCF 77.5 kHz<br>(RoHS compliant) | Article no.: | FBD13020 |

*Subject to change!*